3. Assume that the welded cruciform joint has a notch stress concentration factor of $K_{ns} = 4.4$ ($K_{ns} = \sigma_{notch\ stress} / \sigma_{nominal}$). The plate is loaded axially and the nominal stress history is shown in the figure.

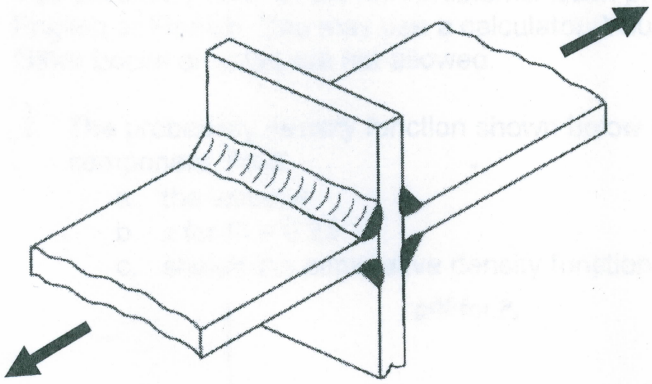

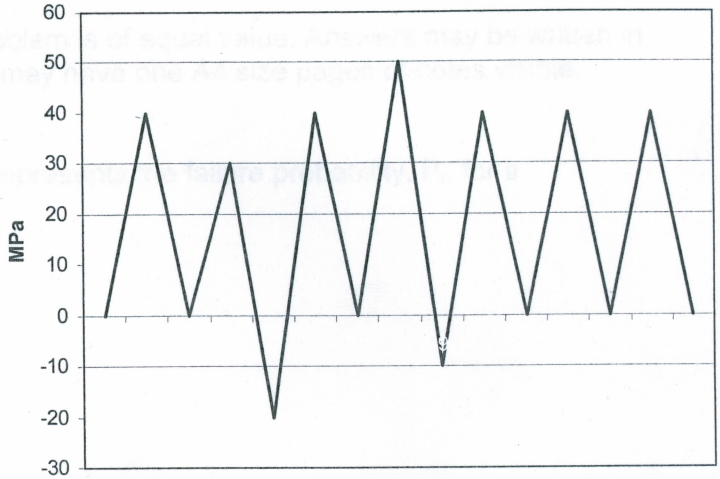

Perform a rainflow count of all cycles in the load history.
Determine the equivalent stress range
What is the expected life (in cycles) of this joint based on the effective notch stress curve FAT 225?
What is the expected life in blocks?

4. Use a couple sentences to explain each of the following terms / concepts
   a) cyclic hardening
   b) cyclic softening
   c) K_t
   d) K_f
   e) elastic-linear hardening material
   f) R ratio
   g) Fatigue limit
   h) H'
   i) ΔK
   j) N_f