Microfluidic and BioMEMS, CHEM-E8135, 19.4.2017

sami.franssila@aalto.fi; ville.p.jokinen@aalto.fi

Answer 5 out of 6 questions. All questions are worth 6 points.

Make sure your answers are coherent and consistent: a collection of facts is not an answer. You have to argue for your choices: there is usually more than one way of doing things, and therefore you have to give reasons for doing things your way.

Draw figures and graphs when appropriate.

Answer using pencil, or if you use pen, make sure to sketch your answer properly on a non-official paper before writing it down to official exam paper to avoid overwriting.

Start answer to each question from top of a new page. Ask for more paper if needed.

1. Organ-on-a-chip. 6 p.
Write an essay on organs-on-a-chip. You should consider for example the motivation to have organ-on-a-chip, the requirements for cell growth on a chip, time scale, size scale, interactions, etc. Also discuss the example below: cancer-on-a-chip.

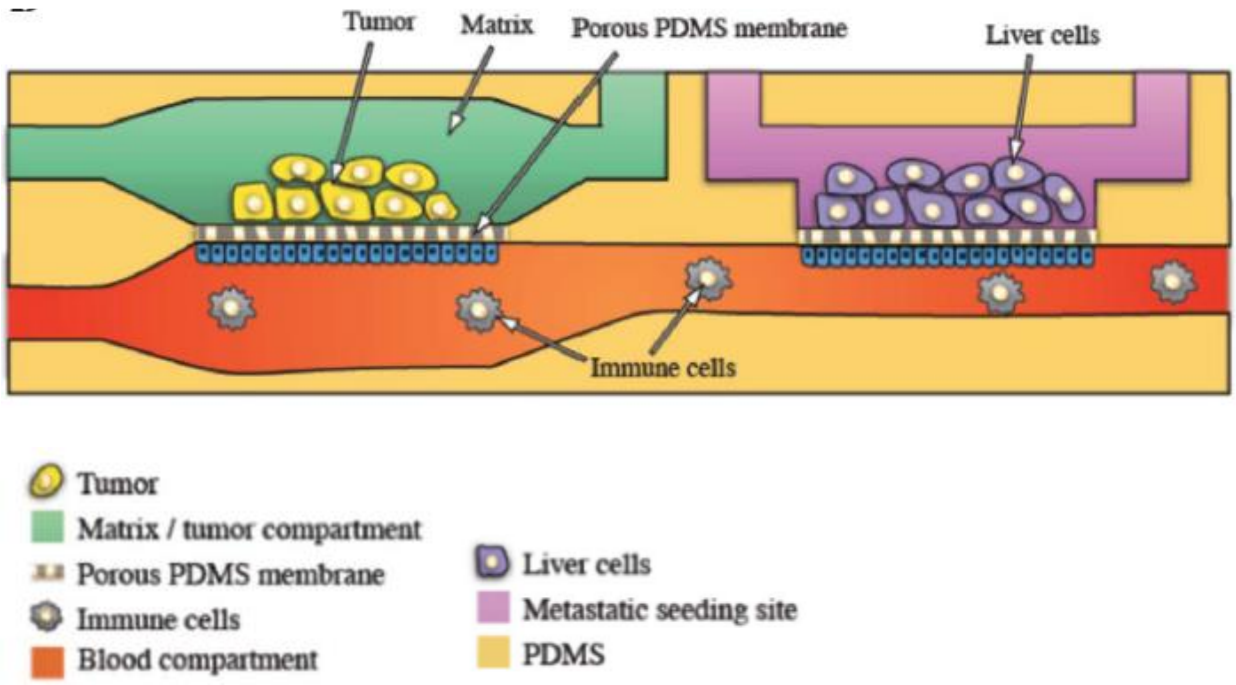

2. PDMS as materials for microfluidic devices. Discuss materials properties, fabrication processes, device requirements, and chip operation. In addition to general discussion, you must describe concrete examples in your answer. 6 points.

3. Continue the sentences, 1 point each. Note that phishing may be dangerous: if you list many things and include wrong ones, the answer will yield no points. Max 2 sentences.

a) The benefits of adhesive bonding include…
b) The main technique to fabricate closed microfluidic channels is…
c) Typical structure sizes in microfluidics…
d) Microreactors…
e) The key benefit of digital microfluidics (EWOD) is…
f) Microfluidic valves are classified…

4. Laminar flow and its consequences in microfluidics (discuss physical basis, phenomena, devices, applications,..) (6 p.)

5. Contact angle:
a) Young's contact angle (2pts)
b) Explain two methods to measure contact angles. (2pts)
c) How does contact angle affect adsorption? (2pts)

6. CE and LC on chip. Identify the structures/schematics and shortly explain their role/function in miniaturized CE or LC chips. 1 point each.

a)

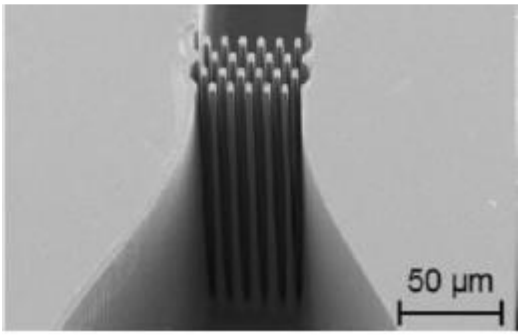

b)

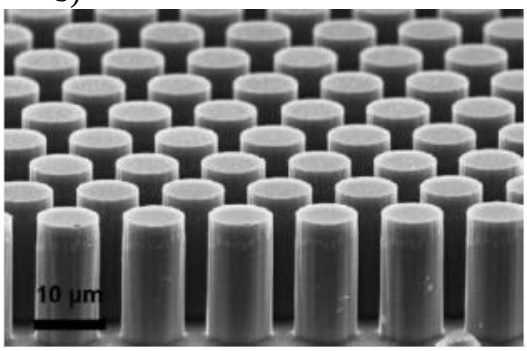

c)

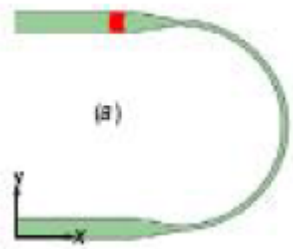

d)

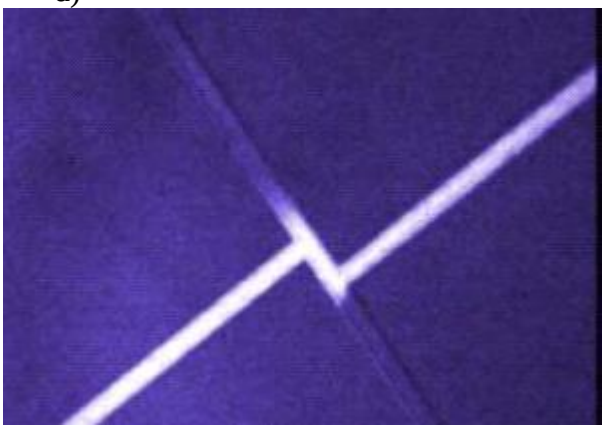

e)

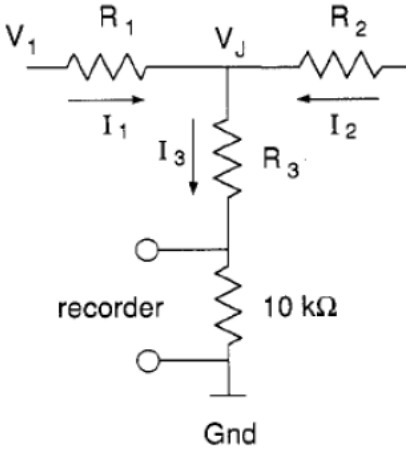

f)