CIV-E 4110 Timber Engineering

Examination date 2.6.2021

General

- **Each student has specific input values (see mycourses)**
- Answer the question on an empty of squared paper
- ONLY handwritten answers are accepted!
- Write clearly on every paper you hand in: the code and name of the course, the date of the exam, your full name, your student number and your signature.
- Write clear and show intermediate steps.
- If some intermediate results are missing, choose an assumption (make a clear mark!) and continue the calculation.
- Use the material properties given in the appendix.
- Upload a scan or picture from your answer during the examination time (the submission is closed at 16.00)

Question 1

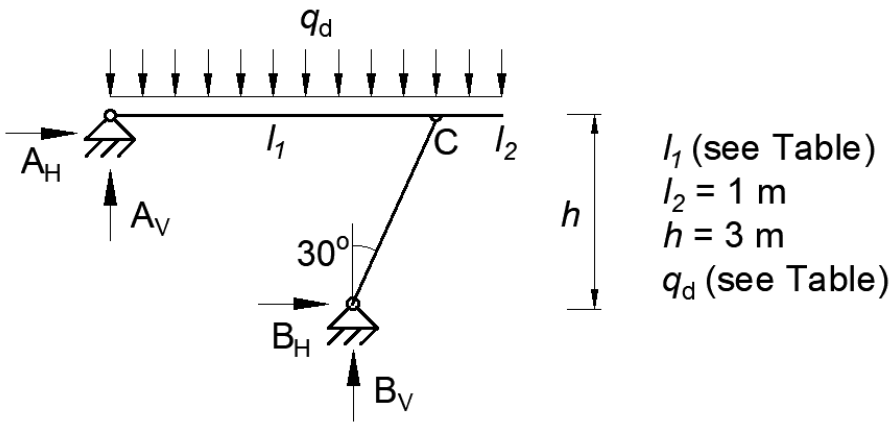

A frame (beam and inclined column) is loaded with a uniformly distributed design load: q_d.
Load-duration class Medium-term and Service class 2 apply.
Beam: GL28h, $b \times h = 140 \times 300$ mm^2.
Column: GL28h, $b \times h = 140 \times 140$ mm^2.

a.) Calculate the reaction forces and illustrate the internal forces [M], [V], [N]. (3 point)

b.) Check all ULS requirements of the beam (instability is prevented). (3 points)

c.) Check the stability of the column. (3 points)

d.) Check the stability of the column for fire exposure $t = 30$ min, using reduced cross-section method. For the load assume $\eta_{fi} = 0.60$. (3.5 points)

Question 2

Note: Use the static system, the dimensions and the material from Question 1
The beam and the coloumn are connected with a step joint connection $t_v = 50$ mm:

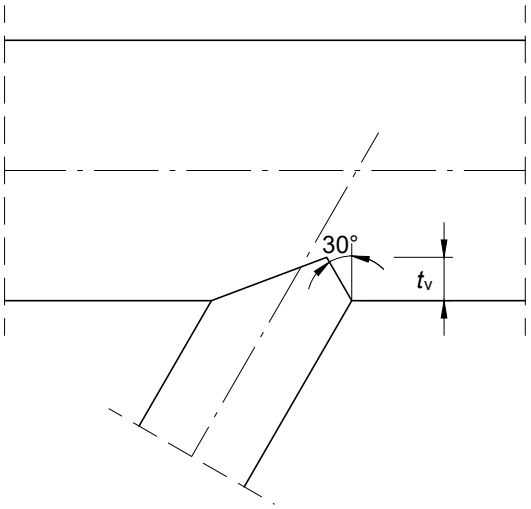

e.) Check all compressive strength in the contact area. (2 points)

f.) Check the resistance against block shear. (1 point)
(Note: the effective length is limited with $l_v \leq 8 \cdot t_v$)

g.) Name all ULS requirements (in the beam and the coloumn) that have to be checked due to the step joint connection. Write down how the step joint effects them (no calculation required). (1 point)

Question 3

Structural timber (C30) are connected with a dowel type connection (take the dowel diameter from the table). Top courds: $b \times h = 60 \times 220$ mm^2, Column: $b \times h = 100 \times 180$ mm^2. $F_{v,ed,1} = 10$ kN, N_d (value from table):

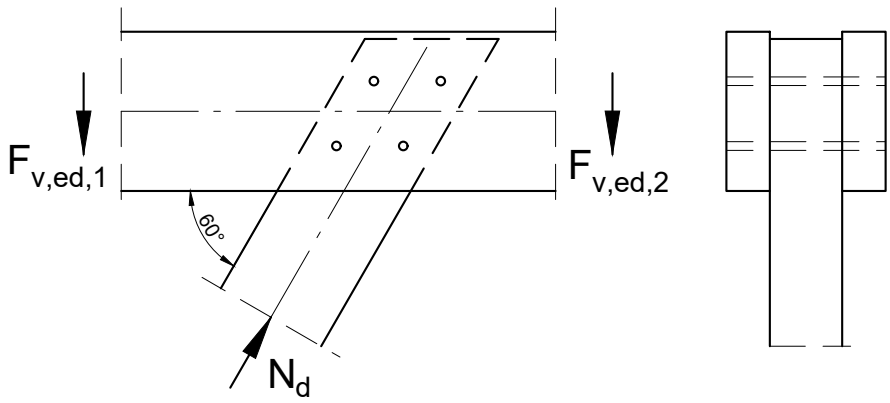

h.) Calculate the design load-carrying capacity per shear plane per fastener. (4.5 points)

i.) Calculated the minimum spacings and edge distances for the dowels. Select an appropirate arrangement and illustrate it (draw to scale). (3 points)

j.) Check all ULS requirement of the connection. (4.5 points)

Appendix

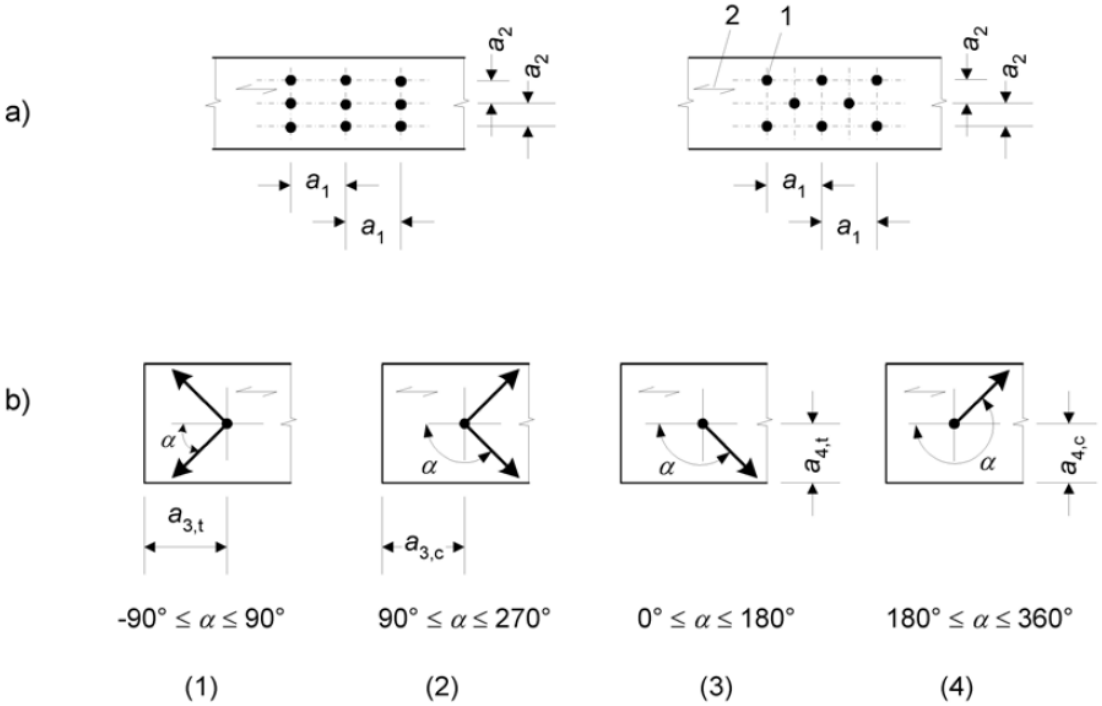

Key:
(1) Loaded end
(2) Unloaded end
(3) Loaded edge
(4) Unloaded edge
1 Fastener
2 Grain direction

Spacing and edge/end distances (see Figure 8.7)	Angle	Minimum spacing or edge/end distance
a_1 (parallel to grain)	$0^\circ \le \alpha \le 360^\circ$	$(3 + 2\lvert\cos\alpha\rvert)\,d$
a_2 (perpendicular to grain)	$0^\circ \le \alpha \le 360^\circ$	$3\,d$
$a_{3,t}$ (loaded end)	$-90^\circ \le \alpha \le 90^\circ$	max (7 d; 80 mm)
$a_{3,c}$ (unloaded end)	$90^\circ \le \alpha < 150^\circ$ $150^\circ \le \alpha < 210^\circ$ $210^\circ \le \alpha \le 270^\circ$	$\max(a_{3,t}\lvert\sin\alpha\rvert)\,d;\ 3d)$ $3\,d$ $\max(a_{3,t}\lvert\sin\alpha\rvert)\,d;\ 3d)$
$a_{4,t}$ (loaded edge)	$0^\circ \le \alpha \le 180^\circ$	$\max([2 + 2\sin\alpha)\,d;\ 3d)$
$a_{4,c}$ (unloaded edge)	$180^\circ \le \alpha \le 360^\circ$	$3\,d$

$$M_{y,Rk} = 0{,}3\, f_{u,k}\, d^{2,6}$$

where:

$M_{y,Rk}$ is the characteristic value for the yield moment, in Nmm;

$f_{u,k}$ is the characteristic tensile strength, in N/mm²;

d is the bolt diameter, in mm.

$$f_{h,\alpha,k} = \frac{f_{h,0,k}}{k_{90} \sin^2\alpha + \cos^2\alpha}$$

$$f_{h,0,k} = 0{,}082\,(1 - 0{,}01\, d)\, \rho_k$$

where:

$$k_{90} = \begin{cases} 1{,}35 + 0{,}015\, d & \text{for softwoods} \\ 1{,}30 + 0{,}015\, d & \text{for LVL} \\ 0{,}90 + 0{,}015\, d & \text{for hardwoods} \end{cases}$$

and:

$f_{h,0,k}$ is the characteristc embedment strength parallel to grain, in N/mm^2;

ρ_k is the characteristic timber density, in kg/m³;

α is the angle of the load to the grain;

d is the bolt diameter, in mm.

$$n_{ef} = \min \begin{cases} n \\ n^{0,9} \sqrt[4]{\dfrac{a_1}{13d}} \end{cases}$$

$$F_{v,Rk} = \min \begin{cases} f_{h,1,k} t_1 d & \text{(a)} \\ f_{h,2,k} t_2 d & \text{(b)} \\ \dfrac{f_{h,1,k} t_1 d}{1+\beta}\left[\sqrt{\beta + 2\beta^2\left[1+\dfrac{t_2}{t_1}+\left(\dfrac{t_2}{t_1}\right)^2\right]+\beta^3\left(\dfrac{t_2}{t_1}\right)^2} - \beta\left(1+\dfrac{t_2}{t_1}\right)\right] + \dfrac{F_{ax,Rk}}{4} & \text{(c)} \\ 1{,}05\dfrac{f_{h,1,k} t_1 d}{2+\beta}\left[\sqrt{2\beta(1+\beta)+\dfrac{4\beta(2+\beta)M_{y,Rk}}{f_{h,1,k} d \quad t_1^2}} - \beta\right] + \dfrac{F_{ax,Rk}}{4} & \text{(d)} \\ 1{,}05\dfrac{f_{h,1,k} t_2 d}{1+2\beta}\left[\sqrt{2\beta^2(1+\beta)+\dfrac{4\beta(1+2\beta)M_{y,Rk}}{f_{h,1,k} d \quad t_2^2}} - \beta\right] + \dfrac{F_{ax,Rk}}{4} & \text{(e)} \\ 1{,}15\sqrt{\dfrac{2\beta}{1+\beta}}\sqrt{2M_{y,Rk} f_{h,1,k} d} + \dfrac{F_{ax,Rk}}{4} & \text{(f)} \end{cases}$$

$$F_{v,Rk} = \min \begin{cases} f_{h,1,k} t_1 d & \text{(g)} \\ 0{,}5 f_{h,2,k} t_2 d & \text{(h)} \\ 1{,}05\dfrac{f_{h,1,k} t_1 d}{2+\beta}\left[\sqrt{2\beta(1+\beta)+\dfrac{4\beta(2+\beta)M_{y,Rk}}{f_{h,1,k} d \quad t_1^2}} - \beta\right] + \dfrac{F_{ax,Rk}}{4} & \text{(j)} \\ 1{,}15\sqrt{\dfrac{2\beta}{1+\beta}}\sqrt{2M_{y,Rk} f_{h,1,k} d} + \dfrac{F_{ax,Rk}}{4} & \text{(k)} \end{cases}$$

with

$$\beta = \frac{f_{h,2,k}}{f_{h,1,k}}$$

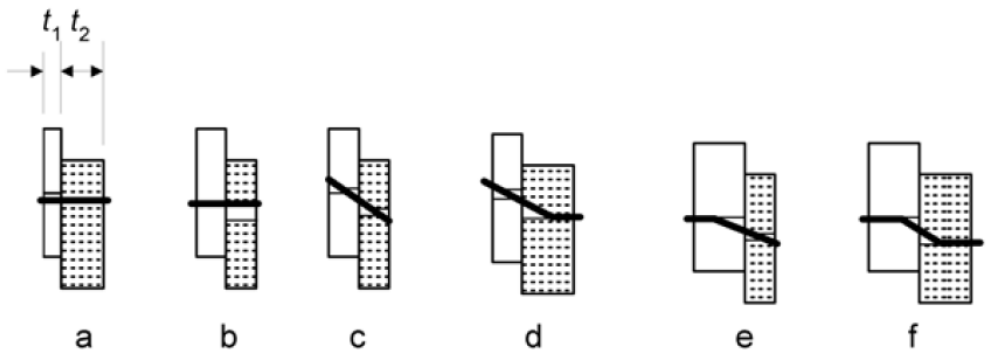

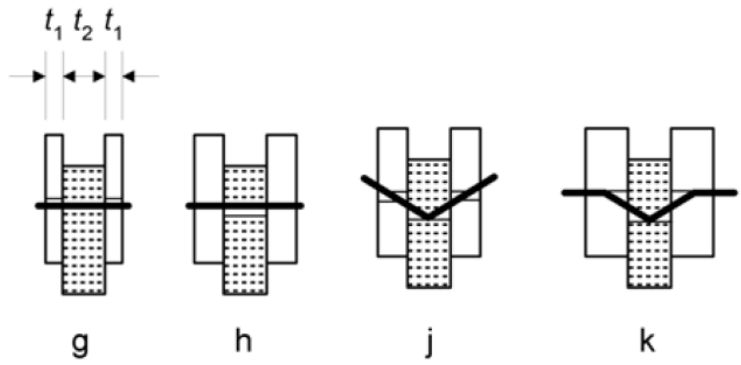

k_{mod} for Solid timber, GLT, LVL, Plywood

Load-duration class	Service class 1	2	3
Permanent	0.60	0.60	0.50
Long-term	0.70	0.70	0.55
Medium-term	0.80	0.80	0.65
Short-term	0.90	0.90	0.70
Instantaneous	1.10	1.10	0.90

Characteristic values – GLT

For softwood GLT – homogeneous lay-up			Strength classes GL20h	GL24h	GL28h	GL32h
Strength properties MPa	Bending	$f_{\mathrm{m,g,k}}$	20	24	28	32
	Tension parallel	$f_{\mathrm{t,0,g,k}}$	16	19.2	22.3	25.6
	Tension perpendicular	$f_{\mathrm{t,90,g,k}}$	0.5	0.5	0.5	0.5
	Compression parallel	$f_{\mathrm{c,0,g,k}}$	20	24	28	32
	Compression perpendicular	$f_{\mathrm{c,90,g,k}}$	2.5	2.5	2.5	2.5
	Shear	$f_{\mathrm{v,g,k}}$	3.5	3.5	3.5	3.5
	Rolling shear	$f_{\mathrm{r,g,k}}$	1.2	1.2	1.2	1.2
Stiffness properties [GPa]	Mean modulus of elasticity parallel	$E_{\mathrm{0,g,mean}}$	8.4	11.5	12.6	14.2
	5 % modulus of elasticity parallel	$E_{\mathrm{0,g,05}}$	7.0	9.6	10.5	11.8
	Mean modulus of elasticity perpendicular	$E_{\mathrm{90,g,mean}}$	0.30	0.30	0.30	0.30
	5 % modulus of elasticity perpendicular	$E_{\mathrm{90,g,05}}$	0.25	0.25	0.25	0.25
	Mean shear modulus	$G_{\mathrm{g,mean}}$	0.65	0.65	0.65	0.65
	5 % shear modulus	$G_{\mathrm{g,05}}$	0.54	0.54	0.54	0.54
	Mean rolling shear modulus	$G_{\mathrm{r,g,mean}}$	0.065	0.065	0.065	0.065
	5 % rolling shear modulus	$G_{\mathrm{r,g,05}}$	0.054	0.054	0.054	0.054
Density [kg/m^3]	Density	ρ_{k}	340	385	425	440
	Mean Density	ρ_{mean}	370	420	460	490

Characteristic values – Structural timber

For softwood based on edgewise bending tests		Strength classes C16	C18	C24	C30
Strength properties [MPa]					
Bending	$f_{\mathrm{m,k}}$	16	18	24	30
Tension parallel	$f_{\mathrm{t,0,k}}$	8.5	10	14.5	18
Tension perpendicular	$f_{\mathrm{t,90,k}}$	0.4	0.4	0.4	0,4
Compression parallel	$f_{\mathrm{c,0,k}}$	17	18	21	24
Compression perpendicular	$f_{\mathrm{c,90,k}}$	2.2	2.2	2.5	2,7
Shear	$f_{\mathrm{v,k}}$	3.2	3.4	4.0	4.0
Stiffness properties [GPa]					
Mean modulus of elasticity parallel	$E_{\mathrm{0,mean}}$	8.0	9.0	11	12
5 % modulus of elasticity parallel	$E_{\mathrm{0,05}}$	5.4	6.0	7.4	8,0
Mean modulus of elasticity perpendicular	$E_{\mathrm{90,mean}}$	0.27	0.30	0.37	0.40
Mean shear modulus	G_{mean}	0.50	0.56	0.69	0.75
Density [kg/m^3]					
Density	ρ_{k}	310	320	350	380
Mean Density	ρ_{mean}	370	380	420	460